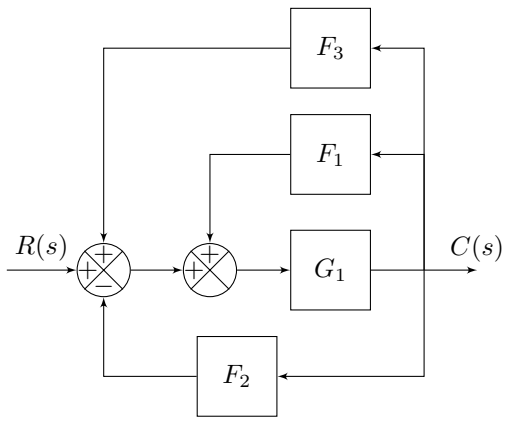
F_3
F_1
$R(s)$
G_1
$C(s)$
F_2